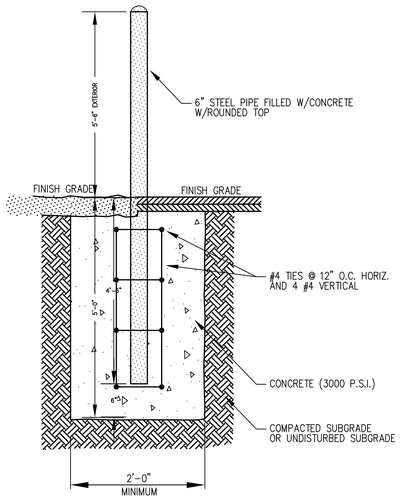

STEEL BOLLARD DETAIL

NOT TO SCALE

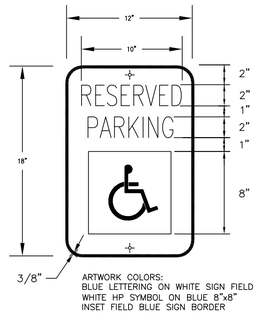

SIGN DETAIL FOR HP PARKING

NTS

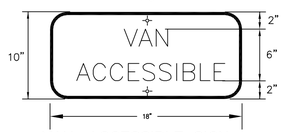

VAN-ACCESSIBLE SIGN

NTS

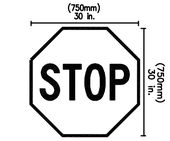

STOP SIGN

NOT TO SCALE

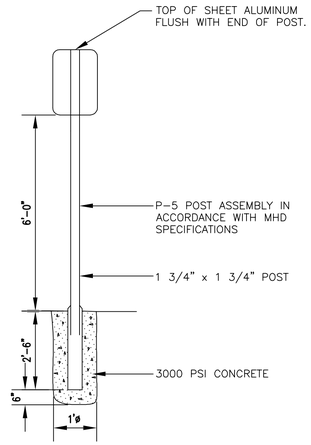

SIGN POST DETAIL

NTS

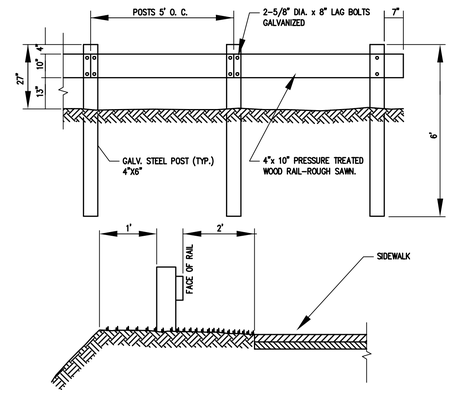

WOOD GUARDRAIL & STEEL POST DETAIL

NOT TO SCALE

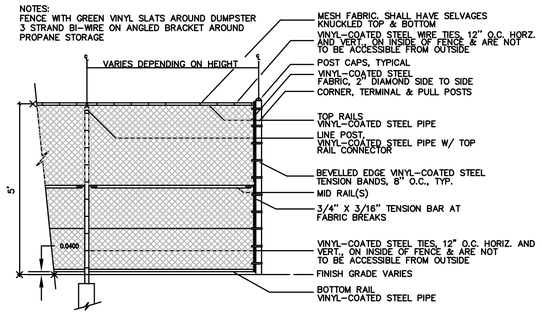

CHAIN LINK FENCE DETAIL

NOT TO SCALE

CONSTRUCTION NOTES

1. THE CONTRACTOR SHALL REPORT TO THE OWNER AND ENGINEER ANY SIGNIFICANT VARIATIONS IN EXISTING SITE CONDITIONS FROM THOSE SHOWN ON THESE PLANS. ANY PROPOSED REVISIONS TO THE WORK, IF REQUIRED BY THESE SITE CONDITIONS, SHALL NOT BE UNDERTAKEN UNTIL REVIEWED BY THE OWNER AND THE ENGINEER.
2. THE CONTRACTOR SHALL NOTIFY THE RELEVANT TOWN DEPARTMENTS AT LEAST 48 HOURS IN ADVANCE OF ANY REQUIRED INSPECTIONS.
3. IN ORDER TO PROTECT THE PUBLIC SAFETY DURING CONSTRUCTION, THE CONTRACTOR IS RESPONSIBLE FOR INSTALLING AND MAINTAINING AT ALL TIMES NECESSARY SAFETY DEVICES AND PERSONNEL, WARNING LIGHTS, BARRICADES, AND POLICE DETAILS.
4. THE CONTRACTOR SHALL REGULARLY INSPECT THE PERIMETER OF THE PROPERTY TO CLEAN UP AND REMOVE LOOSE CONSTRUCTION.
5. IT SHALL BE THE RESPONSIBILITY OF THE CONTRACTOR TO INSTITUTE EROSION CONTROL MEASURES ON AN AS NECESSARY BASIS, SUCH THAT EXCESSIVE SOIL EROSION DOES NOT OCCUR. MEASURES SHALL INCLUDE HAY BALE DIKES ALONG THE PERIMETER OF CUTS AND FILLS, MULCHING, AND PLANTING OF DISTURBED AREAS AS SOON AS PRACTICABLE.
6. AT THE END OF CONSTRUCTION THE CONTRACTOR SHALL REMOVE ALL CONSTRUCTION DEBRIS AND SURPLUS MATERIALS FROM THE SITE. A THOROUGH INSPECTION OF THE WORK PERIMETER IS TO BE MADE AND ALL DISCARDED MATERIALS, BLOWN OR WATER CARRIED DEBRIS, SHALL BE COLLECTED AND REMOVED.
7. AT THE END OF CONSTRUCTION, AFTER ALL DISTURBED AREAS HAVE BEEN STABILIZED, THE CONTRACTOR SHALL CLEAN THE SUMPS OF ALL CATCH BASINS AND THE INVERTS OF ALL DRAINS.
8. THE CONTRACTOR IS TO VERIFY THE LOCATION, SIZE, AND DEPTH OF EXISTING UTILITIES PRIOR TO TAPPING INTO , CROSSING OR EXTENDING THEM. IF THE PROPOSED WORK POSES A CONFLICT WITH THE EXISTING UTILITIES, THE ENGINEER IS TO BE NOTIFIED PRIOR TO THE CONTRACTOR CONTINUING.

   REFER TO ARCHITECTURAL DRAWINGS FOR EXACT BUILDING DIMENSIONS, DOOR LOCATIONS, AND ENTRY DETAILS.

STANDARD BLASTING CONDITIONS

1. RESIDENTS WITHIN 300 FEET OF THE PROPERTY LINE SHALL BE GIVEN THE OPPORTUNITY FOR A PRE-BLAST AND POST-BLAST SURVEY IN ACCORDANCE WITH 527 CMR 13:11 (2).
2. RESIDENTS WITHIN 100 FEET OF ANY BLAST HOLE SHALL BE PROVIDED WITH PRE-BLAST SURVEYS.
3. THE APPLICANT'S GEO-TECHNICAL CONSULTANT SHALL DESIGN A BLAST PROGRAM WHEREIN NO PARTICLE VELOCITY WILL EXCEED 1.0 INCHES PER SECOND AT THE DWELLING OF ANY ABUTTER. THE SCOPE OF THIS BLAST PROGRAM SHALL ENCOMPASS AND THESE CONDITIONS SHALL APPLY TO ALL BLASTING WITHIN THE PROPERTY, INCLUDING BLASTING ONSITE AS WELL AS WITHIN THE PUBLIC RIGHT OF WAY AREAS.
4. A SEISMOGRAPH SHALL BE PLACED WITHIN 15 FEET OF THE NEAREST HOME TO THE BLAST HOLE BETWEEN THE BLAST AND THE HOME. MULTIPLE SEISMOGRAPHS SHALL BE UTILIZED WHERE DEEMED APPROPRIATE BY THE GEO-TECHNICAL CONSULTANTS.
5. BLASTING WILL BE PERMITTED BETWEEN 9:00 AND 3:00 P.M., MONDAY THROUGH FRIDAY ONLY.
6. THE APPLICANT SHALL PROVIDE PHYSICAL NOTICE OF BLAST TO PROPERTY OWNERS ADJACENT TO SUBDIVISION (ABUTTERS) BY KNOCKING ON DOORS OR RINGING DOORBELLS OF SAID PARTIES IMMEDIATELY PRIOR TO BLASTS. THE APPLICANT SHALL PROVIDE AN ANTICIPATED SCHEDULE TO THE PLANNING BOARD, THE FIRE DEPARTMENT ANY LIAISON PERSON APPOINTED BY THE NEIGHBORHOOD.
7. THE APPLICANT SHALL PROVIDE THE PLANNING BOARD WITH THE NAMES AND ADDRESSES OF ALL PARTIES REQUESTING A PRE-BLAST SURVEY AND OF THOSE RECEIVING MANDATORY SURVEYS.
8. ANY COMPLAINTS REGARDING BLASTING FILED WITH THE FIRE DEPARTMENT SHALL BE PROVIDED BY THE APPLICANT TO THE PLANNING BOARD. IF THE PLANNING BOARD DEEMS THE BASIS OF ANY COMPLAINT TO BE A SERIOUS VIOLATION OF THESE CONDITIONS, THE PLANNING BOARD MAY ORDER THE BLAST WORK TO STOP FOR A PERIOD OF TIME NOT TO EXCEED FIVE (5) WORKING DAYS. THE APPLICANT SHALL IN SUCH EVENT APPEAR BEFORE THE BOARD TO EXPLAIN MEASURES BEING TAKEN TO PREVENT ANY FURTHER VIOLATION OF THESE CONDITIONS.
9. THE APPLICANT SHALL PAY FOR THE COST OF TWO (2) SPOT CHECKS WEEKLY BY THE FIRE DEPARTMENT RELATING TO BLASTING. COPIES OF DAILY LOGS AND SEISMIC RECORDS OF EACH BLAST AND THE DAY'S ACTIVITIES SHALL BE PROVIDED BY THE APPLICANT TO THE FIRE DEPARTMENT AND THE PLANNING BOARD WITHIN FIVE (5) WORKING DAYS, OR SOONER IF REQUESTED.
10. THE APPLICANT SHALL PROVIDE, PRIOR TO THE COMMENCEMENT OF BLASTING, A NAME, ADDRESS AND TELEPHONE NUMBER OF A CONTACT PERSON FOR MATTERS RELATING TO BLASTING. THIS INFORMATION IS TO BE MAILED TO THE PRIVATE PARTIES REQUESTING NOTICE PURSUANT TO CHAPTER 41 AND CHAPTER 81T AND ALL RESIDENTS WITHIN 300 FEET OF THE PROPERTY.

10. NO LEDGE, BOULDERS, OR OTHER UNYIELDING MATERIALS ARE TO BE LEFT WITHIN 6" OF THE UTILITY SERVICES IN THE TRENCH, NOR ARE THEY TO BE USED FOR BACKFILL FOR THE FIRST 12" ABOVE THE SERVICES.
11. STANDARD PAVEMENT AREAS SHALL HAVE 18 INCHES OF GOOD, CLEAN BANK-RUN GRAVEL, CONFORMING TO MDPW M1.03.1, WITH NO STONES LARGER THAN 3" IN DIAMETER AND SHALL BE PLACED AND ROLLED WITH AT LEAST A TEN TON ROLLER. THE SURFACES SHALL BE WET DURING ROLLING TO BIND THE MATERIAL. ALL STONES OF 4" DIAMETER OR LARGER SHALL BE REMOVED FROM THE SUB-BASE PRIOR TO PLACING BASE MATERIAL.
12. STANDARD PAVEMENT AREAS SHALL BE PAVED TO A THICKNESS OF 4" MEASURED AFTER COMPACTION, WITH A 2 1/2" BINDER COURSE AND 1 1/2" TOP COURSE OF CLASS I BITUMINOUS CONCRETE PAVEMENT, TYPE I-1.
13. THE AGGREGATE SHALL BE COMPOSED, MIXED AND LAID HOT IN TWO COURSES AS SPECIFIED IN THE "COMMONWEALTH OF MASSACHUSETTS STANDARD SPECIFICATIONS FOR HIGHWAY AND BRIDGES", 1988 EDITION SECTION 460 FOR CLASS I BITUMINOUS CONCRETE PAVEMENT, AS SPECIFICALLY SET FORTH IN SECTION 460.20 AND 460.82.
14. EROSION CONTROL GRASS MIXTURE (SIDE SLOPE GREATER THAN 4 HORIZONTAL TO 1 VERTICAL) FOLLOWING COMPLETION OF GRADING. THE FOLLOWING SEED MIX SHALL BE APPLIED:

TYPE OF SEED	% BY WEIGHT
CREEPING RED FESCUE	
TALL FESCUE	30
WHITE DUTCH CLOVER	30
RED TOP	30
	10

SEED AT THE RATE OF 2#/2,000 SF
USE THE ABOVE MIX AT THE RATE OF 50#/ACRE AND WITH 1/2 BUSHEL/ACRE OF WINTER RYE

17. ALL DISTURBED AREAS ARE TO BE LOAMED AND SEEDED WITH A MINIMUM OF 6" OF TOP SOIL SPREAD EVENLY THROUGHOUT. PROVIDE EROSION CONTROL MEASURES AS NECESSARY TO PROVIDE SLOPE STABILITY UNTIL VEGETATION IS ESTABLISHED.
18. ALL STUMPS, TOP SOIL, SUB SOIL AND OTHER DELETERIOUS MATERIALS ARE TO BE REMOVED FROM THE PROPOSED BUILDING AND PAVING AREAS.

9/5/19

REV. NO.	DATE	REVISION

TITLE:

SITE DEVELOPMENT PLAN
FOR
51 TECHNOLOGY PARK ROAD
STURBRIDGE, MASSACHUSETTS 01566

PREPARED FOR:

DILEO GAS
630 SUNDERLAND ROAD
WORCESTER, MASSACHUSETTS 01604

PREPARED BY:

J.M. GRENIER ASSOCIATES INC.
787 HARTFORD TURNPIKE
SHREWSBURY, MASSACHUSETTS 01545
TELE NO.: (508) 845-2500 FAX NO.: (508) 842-0800

SCALE:	DATE:
N.T.S.	SEPTEMBER 5, 2019

DETAIL PLAN 2/2

SHEET NO.:	PROJECT NO.:
SHEET 9 OF 9	G-565