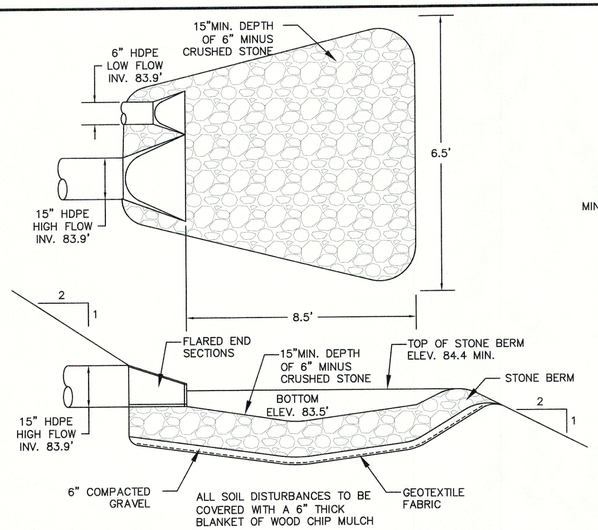

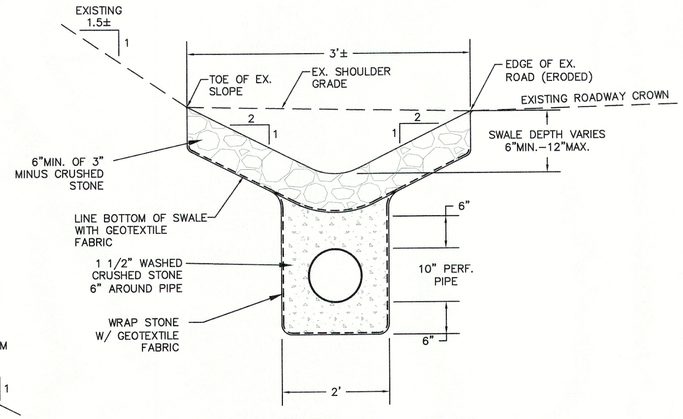

SWALE / INFILTRATION TRENCH DETAIL
NO SCALE

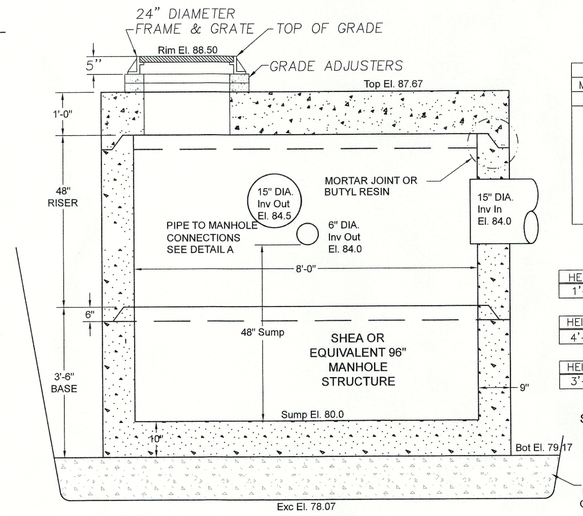

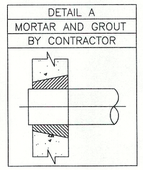

FLAT TOP

HEIGHT	ITEM NO	WEIGHT
1'-0"	MH8-FT8ID	11,225#

RISER SECTION

HEIGHT	ITEM NO	WEIGHT
4'-0"	MH8-48CS8ID	12,204#

BASE SECTION

HEIGHT	ITEM NO	WEIGHT
3'-6"	MH8-42S8ID	18,690#

SHEA OR EQUIVALENT MANHOLE SECTIONS

NOTES:
1. CONCRETE: 4,000 PSI MINIMUM AFTER 28 DAYS.
2. REINFORCED STEEL CONFORMS TO ASTM A185 SPEC. 0.18 SQ. IN./LINEAL FT. AND 0.18 SQ. IN. (BOTH WAYS) BASE BOTTOM.
3. DESIGN LOADING PER AASHTO HS-20, 1 TO 5 FEET COVER.
4. MANHOLE DESIGN SPECS CONFORM TO ASTM C478 SPEC FOR "PRECAST REINFORCED CONCRETE MANHOLE SECTIONS."
5. BUTYL RESIN SECTION JOINT CONFORMS TO ASTM C990 SPECIFICATION.

96" DIA. SEDIMENT BASIN/TRAP
NO SCALE

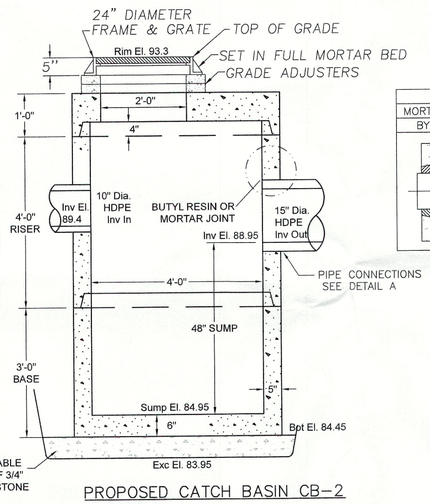

FLAT TOP

	ITEM NO	WEIGHT
1 HOLE	MH4-FT4ID	1,620#

RISER SECTION

HEIGHT	ITEM NO	WEIGHT
4'-0"	MH4-48CS4ID	3,424#

BASE SECTION

HEIGHT	ITEM NO	WEIGHT
3'-0"	MH4-36S4ID	3,495#

SHEA OR EQUIVALENT MANHOLE SECTIONS

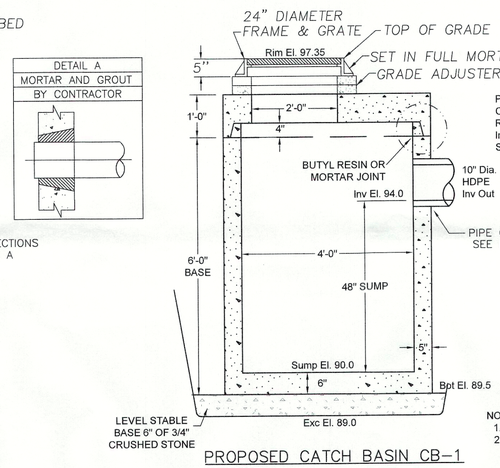

PROPOSED CATCH BASIN CB-2
NO SCALE

PROPOSED
Catch Basin
Rim 97.35
Inv Out 93.35
Sump El 89.35

FLAT TOP

	ITEM NO	WEIGHT
1 HOLE	MH4-FT4ID	1,620#

BASE SECTION

HEIGHT	ITEM NO	WEIGHT
6'-0"	MH4-72S4ID	6,060#

SHEA OR EQUIVALENT MANHOLE SECTIONS

NOTES:
1. CONCRETE: 4,000 PSI MINIMUM AFTER 28 DAYS.
2. REINFORCED STEEL CONFORMS TO ASTM A185 SPEC. 0.12 SQ. IN./LINEAL FT. AND 0.12 SQ. IN. (BOTH WAYS) BASE BOTTOM.
3. DESIGN LOADING PER AASHTO HS-20, 1 TO 5 FEET COVER.
4. MANHOLE DESIGN SPECS CONFORM TO ASTM C478 SPEC FOR "PRECAST REINFORCED CONCRETE MANHOLE SECTIONS."

PROPOSED CATCH BASIN CB-1
NO SCALE

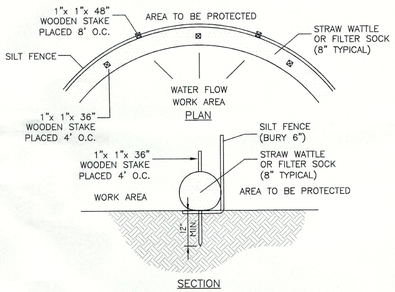

EROSION CONTROL BARRIER (ECB)
SCALE: N.T.S.

Party Responsible For Operation/Maintenance

The general contractor will be responsible for the operation and maintenance of the stormwater system until construction is complete and accepted by the Owner. After acceptance, the Owner will be responsible for the operation and maintenance of the stormwater system.

Schedule For Inspection And Maintenance

The inspection schedule and maintenance requirements for each structural BMP utilized in the site stormwateR system is indicated below:

Catch Basins/Drop Inlets/Sediment Traps: Inspect or clean a minimum of four times per year and at the end of the foliage and snow removal seasons. Sediments must be removed whenever the depth of deposits is greater than or equal to one half the sump depth.

Grassed Channels/Swales: Remove sediment at least once a year. Mow grass at least once per month during growing season. Repair areas of erosion and revegetate as needed, but at least annually.

Routine And Non-Routine Maintenance Tasks

Routine and non-routine maintenance tasks for each structural BMP utilized are outlined below:

Catch Basins/Drop Inlets/Sediment Traps: Remove and properly dispose of all sediment and hydrocarbons in accordance with local, state, and federal guidelines and regulations.

Grassed Channels/Swales: Remove and properly dispose of all sediment in accordance with local, state, and federal guidelines and regulations.

CONSTRUCTION NOTES

1.) ALL MATERIALS AND CONSTRUCTION PRACTICES SHALL BE IN CONFORMANCE WITH THE LATEST EDITION OF THE MASSACHUSETTS DEPARTMENT OF PUBLIC WORKS (MDPW) CONSTRUCTION STANDARDS AND THE MDPW "STANDARD SPECIFICATIONS FOR HIGHWAYS AND BRIDGES", UNLESS OTHERWISE SPECIFIED BY LOCAL AUTHORITY OR THE ENGINEER.

2.) THE CONTRACTOR SHALL UTILIZE ALL MEASURES AND MATERIALS NECESSARY TO ENSURE THE SAFETY OF ALL PERSONS AND PROPERTIES AT THE SITE DURING CONSTRUCTION. ALL EXCAVATIONS SHALL CONFORM TO CURRENT OSHA STANDARDS.

3.) UNLESS OTHERWISE NOTED, ALL DISTURBED AREAS SHALL BE DRESSED WITH A MINIMUM OF FOUR INCHES (4") OF LOAM AND SHALL BE SEEDED WITH AN APPROVED GRASS MIX.

4.) THE CONTRACTOR SHALL PROVIDE APPROPRIATE EROSION AND SEDIMENTATION CONTROL MEASURES AT ALL TIMES. DEWATERING OPERATIONS SHALL BE PROVIDED, IF REQUIRED; ALL DISCHARGE SHALL PASS THROUGH SEDIMENTATION CONTROL DEVICES TO PREVENT IMPACTS UPON WATER BODIES, BORDERING VEGETATED WETLANDS, DRAINAGE SYSTEMS AND ABUTTING PROPERTIES.

5.) NO MATERIALS SUBJECT TO EROSION SHALL BE STOCKPILED OVERNIGHT WITHIN 100 FEET OF A CATCH BASIN. ALL MATERIALS STOCKPILED WITHIN 100 FEET OF A CATCH BASIN , SHALL BE RELOCATED, MULCHED OR OTHERWISE TREATED TO INSURE THAT THE MATERIALS ARE NOT CARRIED TO THE CATCH BASIN.

6.) DISTURBED AREAS SHALL BE STABILIZED BY LOAMING AND SEEDING SOON AFTER THE FINISHED GRADE HAS BEEN MET. IF FINAL GRADING DOES NOT OCCUR DURING THE GROWING SEASON, THESE AREAS SHALL BE MULCHED WITH HAY SECURED BY WEIGHTED SNOW FENCE, CHICKEN WIRE MESH OR JUTE NETTING WITH STAPLES. SEED FOR PERMANENT GRASS COVER SHOULD BE ACCORDING TO SOIL CONSERVATION SERVICE GUIDELINES FOR SOIL AND MOISTURE CONDITIONS FOUND ON THE SITE.

7.) SEDIMENTATION CONTROL FENCE AND/OR HAY BALES SHALL BE MAINTAINED UNTIL ALL SLOPES HAVE BEEN STABILIZED AND THERE IS NO DANGER OF EROSION OUTSIDE OF THE PROPERTY.

8.) PRIOR TO INITIATING CONSTRUCTION, SEDIMENTATION CONTROL DEVICES SHALL BE INSTALLED AS SHOWN ON THE PLANS. THE CONTRACTOR SHALL MAINTAIN THE DEVICES UNTIL ALL WORK IS COMPLETE AND ALL AREAS HAVE BEEN STABILIZED.

9.) ACCUMULATED SEDIMENT SHALL BE REMOVED AND DISPOSED OF BY THE CONTRACTOR AS REQUIRED BY THE CONSERVATION COMMISSION OR AS DIRECTED BY THE ENGINEER.

10.) THE FUNCTIONING OF TEMPORARY CULVERTS, DITCHES, SWALES, OR CONSTRUCTION OPERATIONS SHALL NOT CAUSE NOTICEABLE SEDIMENTATION PLUMES. IF PLUMES OCCUR, THE CONTRACTOR SHALL STOP WORK AND INSTALL ADDITIONAL SEDIMENTATION CONTROL DEVICES IMMEDIATELY TO PREVENT FURTHER SEDIMENTATION.

11.) IT SHALL BE THE RESPONSIBILITY OF THE CONTRACTOR TO COORDINATE HIS WORK WITH THE APPROPRIATE HIGHWAY AND UTILITY DEPARTMENTS. CONTRACTOR SHALL MAINTAIN ALL EXISTING AND NEWLY INSTALLED UTILITIES IN GOOD WORKING ORDER AND SHALL PROTECT THEM FROM DAMAGE AT ALL TIMES UNTIL THE WORK IS COMPLETED AND ACCEPTED.

12.) THE CONTRACTOR SHALL PROVIDE FOR ALL TRAFFIC CONTROL IN ACCORDANCE WITH THE TOWN OF STURBRIDGE REQUIREMENTS.

13.) NO TRENCHES SHALL BE ALLOWED TO REMAIN OPEN OVERNIGHT.

14.) ALL REQUIRED PERMITS SHALL BE SECURED PRIOR TO COMMENCING WORK, INCLUDING ANY NECESSARY TRENCH PERMITS.

15.) PROPERTY OWNER SHALL MAINTAIN LANDSCAPING ELEMENTS DURING & AFTER CONSTRUCTION.

16.) EXISTING TREES THAT ARE GREATER THAN 5" CALIBER WITHIN OR ADJACENT TO THE PROPOSED WORK ARE INDICATED ON THE SITE PLAN SET.

17.) THE OWNER OF THE PROPERTY SHALL BE RESPONSIBLE FOR MAINTAINING THE HEALTH AND VISUAL APPEAL OF ALL LANDSCAPING ELEMENTS AFTER CONSTRUCTION.

PRE-CONSTRUCTION:

1. AN EROSION CONTROL BARRIER SHALL BE INSTALLED AS DEPICTED ON THE SITE PLAN, BETWEEN THE AREAS TO BE DISTURBED AND WETLAND AREAS. THIS BARRIER SHALL REMAIN IN PLACE UNTIL ALL TRIBUTARY SURFACES HAVE BEEN FULLY STABILIZED. THE EROSION CONTROL BARRIERS AS SHOWN ON THE SITE PLAN ARE THE MINIMUM REQUIRED TO PROTECT THE ON & OFF SITE DRAINAGE SYSTEMS.

2. PHOTOGRAPHS AND/OR VIDEO IMAGES OF THE PRE-CONSTRUCTION CONDITION OF THE SITE AND SURROUNDING AREAS, ESPECIALLY THE ADJACENT STREETS SHALL BE TAKEN, DEVELOPED AND DATED. A COPY OF THESE MATERIALS SHALL BE SUBMITTED TO THE COMMISSION AND OWNER FOR THEIR FILES. THESE PICTURES AND IMAGES SHALL REFERENCE EXISTING SITE CONDITIONS AND PERMANENT REFERENCE MARKS TO ENABLE RECOGNITION OF THE AREA BEING PHOTOGRAPHED, AND SHALL REPRESENT A COMPREHENSIVE VIEW OF THE SITE PRIOR TO DEVELOPMENT.

3. THE CONTRACTOR SHALL ESTABLISH A STAGING AREA ON A PORTION OF THE AREA TO BE DISTURBED FOR THE OVERNIGHT STORAGE OF EQUIPMENT AND STOCKPILING OF MATERIALS. THE STAGING AREA SHALL BE OUTSIDE OF THE 100' WETLANDS BUFFER ZONE.

4. IN THE STAGING AREA, THE CONTRACTOR SHALL HAVE A STOCKPILE OF MATERIALS REQUIRED TO CONTROL EROSION ON-SITE TO BE USED TO SUPPLEMENT OR REPAIR EROSION CONTROL DEVICES. THESE MATERIALS SHALL INCLUDE, BUT ARE NOT LIMITED TO: HAYBALES, SILT FENCE AND CRUSHED STONE.

5. THE CONTRACTOR IS RESPONSIBLE FOR EROSION CONTROL ON SITE AND SHALL UTILIZE EROSION CONTROL MEASURES WHERE NEEDED, REGARDLESS OF WHETHER THE MEASURES ARE SPECIFIED HEREIN, ON THE PLAN OR IN ANY ORDER OF CONDITIONS.

GENERAL CONSTRUCTION REQUIREMENTS:

1. ANY REFUELING OF CONSTRUCTION VEHICLES AND EQUIPMENT SHALL TAKE PLACE OUTSIDE OF THE 100 FOOT BUFFER ZONE TO THE ENTRANCE TO THE DRAINAGE SYSTEM AND SHALL NOT BE CONDUCTED IN PROXIMITY TO SEDIMENTATION BASINS OR DIVERSION SWALES.

2. NO ON-SITE DISPOSAL OF SOLID WASTE, INCLUDING BUILDING MATERIALS IS ALLOWED IN THE 100 FOOT BUFFER ZONE. THE BURIAL OF STUMPS, CONSTRUCTION DEBRIS OR OTHER MATERIALS SHALL NOT BE ALLOWED ANYWHERE ON-SITE.

3. NO MATERIALS SHALL BE DISPOSED OF INTO THE WETLANDS OR EXISTING OR PROPOSED DRAINAGE SYSTEMS. ALL CONTRACTORS SHALL BE INFORMED THAT THE CLEANING OF EQUIPMENT IS PROHIBITED IN AREAS WHERE THE WASH-WATER WILL DRAIN DIRECTLY TO THE SITE DRAINAGE SYSTEMS.

4. CONTRACTOR IS RESPONSIBLE FOR DUST CONTROL, AS NEEDED.

*FOR PERMIT USE ONLY

08/29/2019 Revised Per Public Hearing
08/06/2019 Added Grassed Swale Notation & O&M
REVISIONS

SUMMIT
Engineering & Survey, Inc.
710 MAIN STREET
OXFORD, MA 01537
P:(508) 987-8713 F:(508) 987-8714

PROPOSED DRAINAGE DETAILS
at
31 SOUTH SHORE DRIVE
STURBRIDGE, MA
PREPARED FOR
GARY & MARGARET ALLARD

SCALE:	AS NOTED
DATE:	JULY 10, 2019
JOB NO:	19-157
PLAN NO:	19-157_ALLARD_TOPO.DWG
SHEET NO:	2 OF 2