STURBRIDGE ZONING: SUBURBAN RESIDENTIAL	
REQUIRED	EXISTING
AREA: 3/4 ACRE	AREA: 0.47 ACRES
FRONTAGE: 125'	FRONTAGE: 127.5'±
FRONT YARD: 30'	FRONT YARD: 23.3'±
SIDE YARD: 15'	SIDE YARD: 3.5/65.2'
REAR YARD: 15'	REAR YARD: 24.2'
%COVERAGE: 15	%COVERAGE: 6.06

LOT IS SERVICED BY TOWN SEWER AND PRIVATE WELL

EXISTING LOT COVERAGE COMPUTATIONS
EXISTING HOUSE 1,043 S.F.
EXIST. DECKS & STAIRS 197 S.F.
TOTAL 1,240 S.F.

1230 X 100 = 6.06%
20,473

HOUSE IN 50' ZONE = 804 S.F.
DECK IN 50' ZONE = 164 S.F.

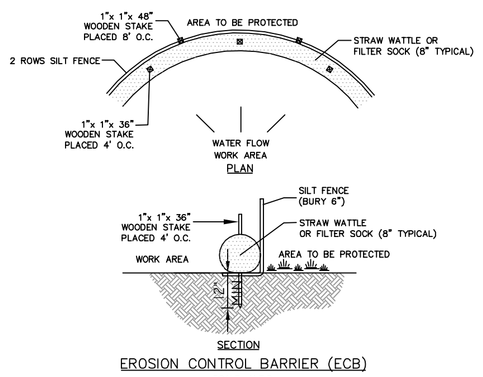

EROSION CONTROL BARRIER (ECB)
SCALE: N.T.S.

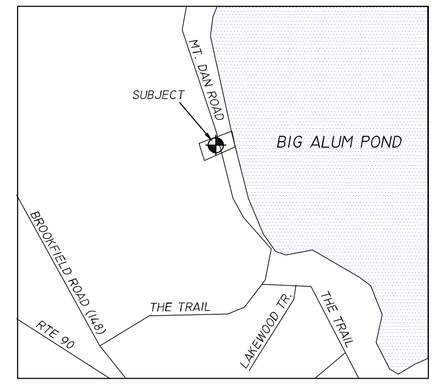

LOT LOCUS
SCALE: NONE

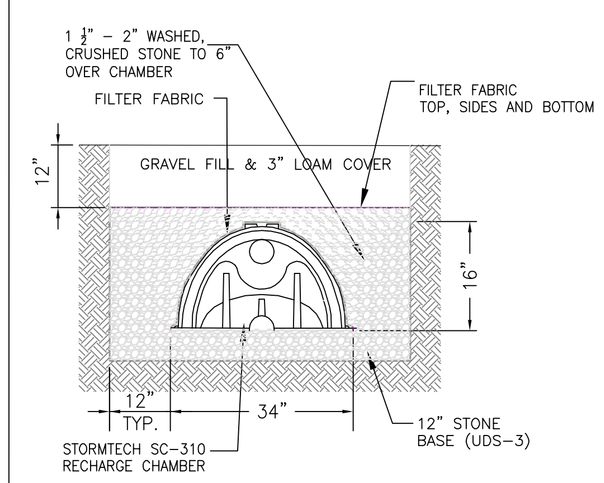

TYPICAL CROSS SECTION RECHARGER SC310
N.T.S.

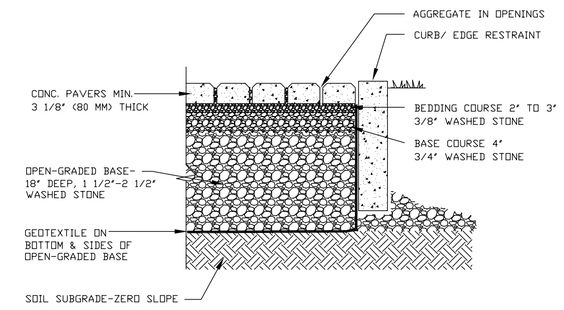

PERVIOUS PAVER DETAIL
SCALE: N.T.S.

STURBRIDGE ZONING: SUBURBAN RESIDENTIAL		
REQUIRED	EXISTING	PROPOSED
AREA: 3/4 ACRE	AREA: 0.47 ACRES	AREA: 0.47 ACRES
FRONTAGE: 125'	FRONTAGE: 127.5'±	FRONTAGE: 127.5'±
FRONT YARD: 30'	FRONT YARD: 23.3'±	FRONT YARD: 14.2'
SIDE YARD: 15'	SIDE YARD: 3.5/65.2'	SIDE YARD: 56.4/16.2'
REAR YARD: 15'	REAR YARD: 24.2'	REAR YARD: 25.7'
%COVERAGE: 15	%COVERAGE: 6.06	%COVERAGE: 7.41

LOT IS SERVICED BY TOWN SEWER AND PRIVATE WELL

PROPOSED LOT COVERAGE COMPUTATIONS
PROPOSED HOUSE 1274 S.F.
PROP DECK AND STAIRS 192 S.F.
PROP FRONT ENTRY 52 S.F.
TOTAL: 1518 S.F.

1518X(100) = 7.41%
20,473

HOUSE IN 50' ZONE = 716 S.F.
DECK IN 50' ZONE = 220 S.F.

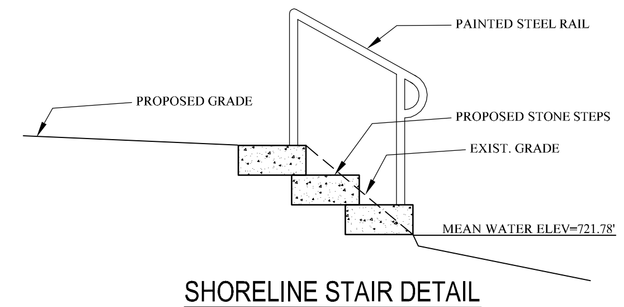

SHORELINE STAIR DETAIL
N.T.S.

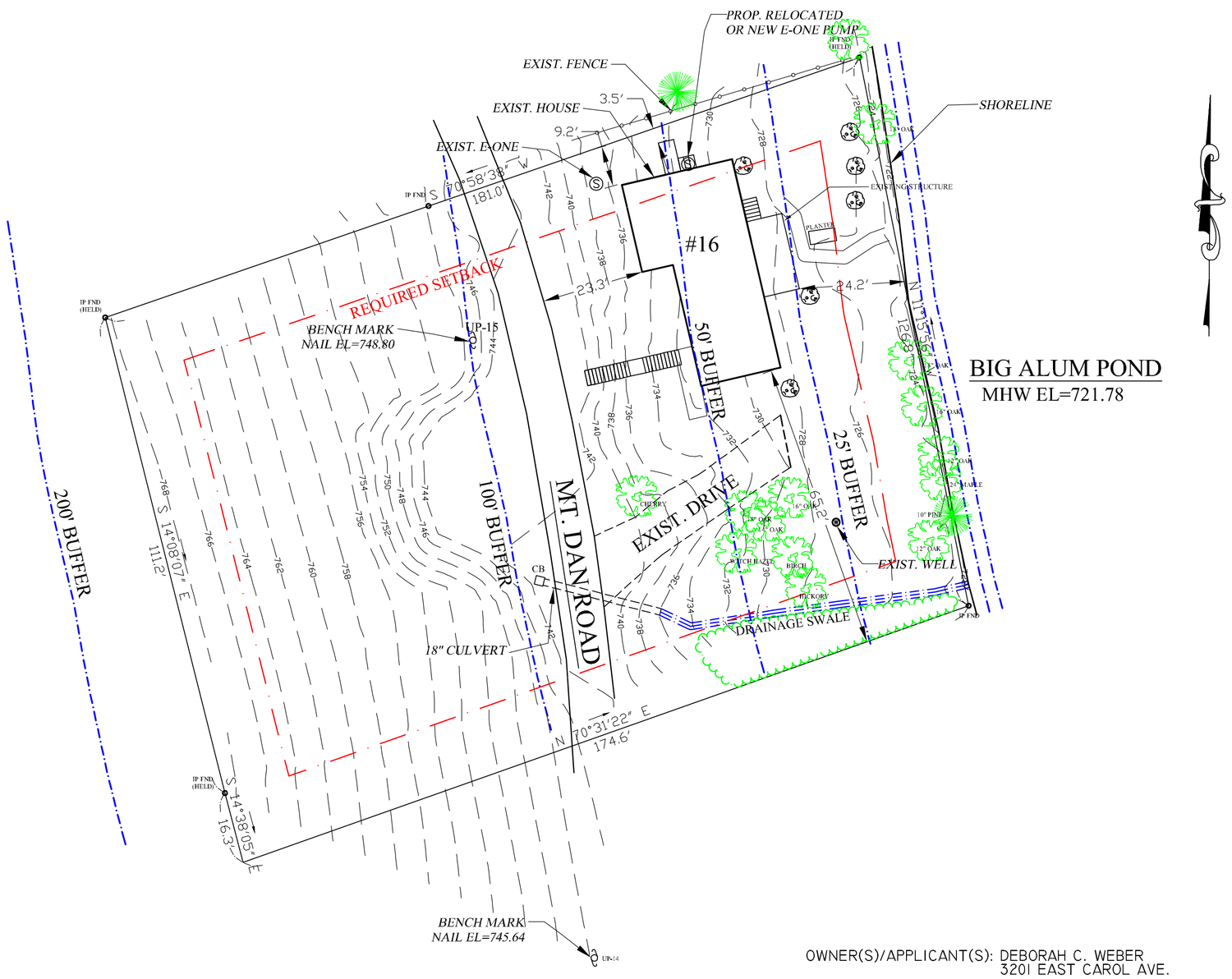

EXISTING SITE PLAN

OWNER(S)/APPLICANT(S): DEBORAH C. WEBER
3201 EAST CAROL AVE.
PHEONIX, AZ 85028

SUSAN C. GROSS
8 EAST RIDGE DRIVE
PETERBOROUGH, NH 03458

HEATHER C. BENNETT
5339 EAST CORTEZ STREET
SCOTTSDALE, AZ 85254

RECORDING: DEED BOOK 46218, PAGES 50
ASSESSORS REF: TAX MAP 14, PARCELS 16

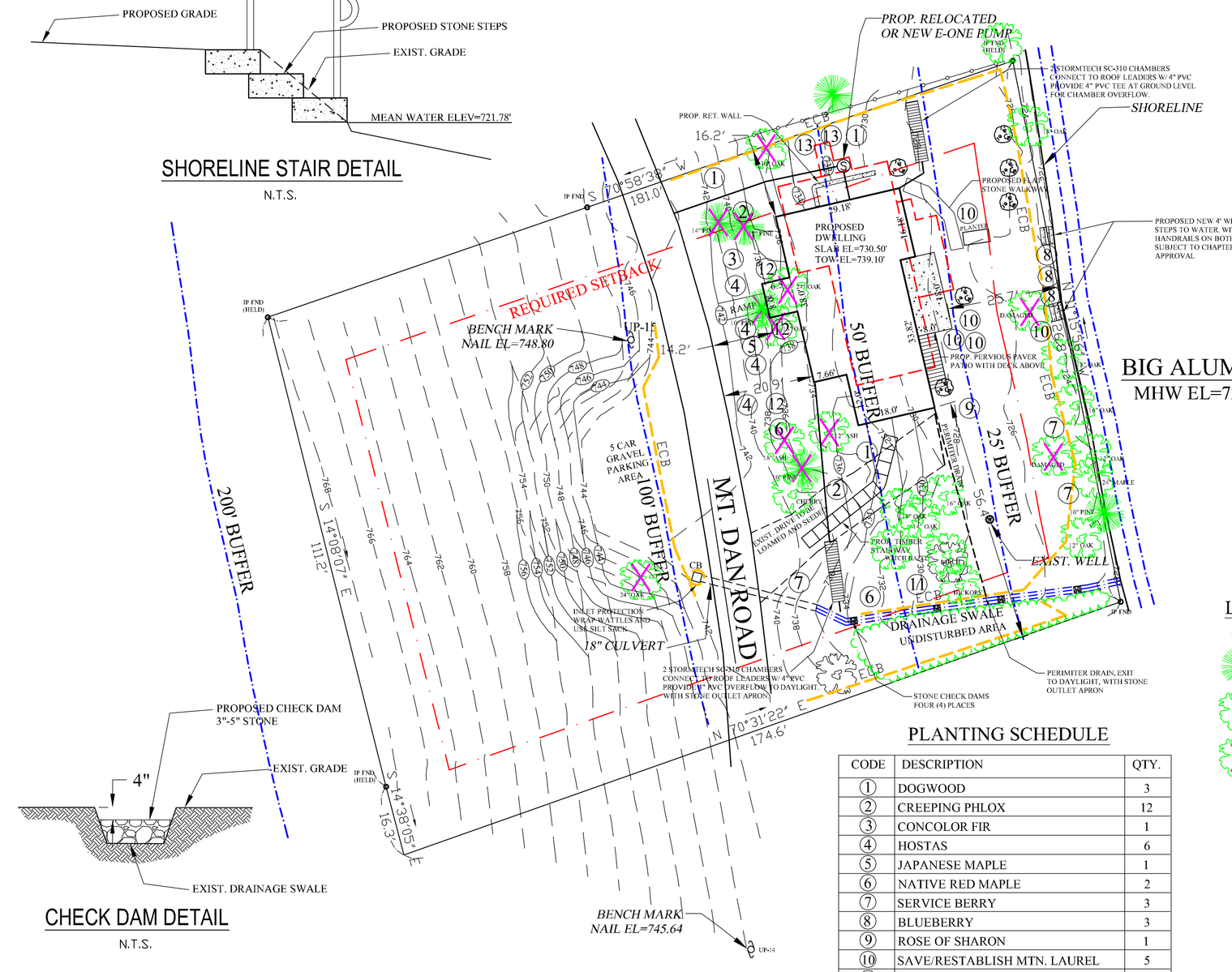

CHECK DAM DETAIL
N.T.S.

LEGEND
= BOULDER/ROCKS
= PINE TREE
= DECIDUOUS TREE
= TREE TO BE REMOVED

PLANTING SCHEDULE

CODE	DESCRIPTION	QTY.
1	DOGWOOD	3
2	CREEPING PHLOX	12
3	CONCOLOR FIR	1
4	HOSTAS	6
5	JAPANESE MAPLE	1
6	NATIVE RED MAPLE	2
7	SERVICE BERRY	3
8	BLUEBERRY	3
9	ROSE OF SHARON	1
10	SAVE/RESTABLISH MTN. LAUREL	5
11	RIVER BIRCH	1
12	BEAR BERRY	3
13	LILAC BUSH	2

NOTE: ALL DISTURBED AREAS TO BE COVERED WITH 4" OF MULCH

PROPOSED SITE PLAN

DEP FILE NO. 300-1135

ORIGINAL		REVISIONS					
DATE 6/23/22	BY	REV.	DATE	DESCRIPTION	MADE	CHK'D	APV'D
DRAFTED BY:	AMT	1	8/9/22	STEP DETAIL, SILT SACK	AMT	LSJ	LSJ
CHECKED	LSJ	2	8/18/22	FIELD CHANGES PER SITE VISIT	AMT	LSJ	LSJ
SUPERVISOR	LSJ	3	9/20/22	ADD LANDSCAPING PLANTINGS	AMT	LSJ	LSJ
REVIEWED	MLJ	4	10/4/22	BUILDING CALCULATIONS	AMT	LSJ	LSJ
REVIEWED		5	12/29/22	ADD RET. WALL. MOVE STAIRS	AMT	LSJ	LSJ
REVIEWED							

COMMONWEALTH OF MASSACHUSETTS
LEONARD STANLEY JALBERT
No. 23300
CIVIL
REGISTERED PROFESSIONAL ENGINEER

JALBERT ENGINEERING, INC.
CIVIL ENGINEERS & SURVEYORS
54 Main Street
Sturbridge, Massachusetts 01566-1244
Telephone: (508) 347-5136 • Toll Free: 1-800-339-5136
Fax: (508) 347-7962

SITE PLAN FOR:
WEBER, GROSS & BENNETT
16 MT. DAN ROAD, STURBRIDGE, MA

GRAPHIC SCALE
20 0 10 20 40 80
(IN FEET)
1 inch = 20 ft.

PLAN DATE: 6/23/22
DWG NUMBER
21129
REV. 5