ZONING: SUBURBAN RESIDENTIAL		
REQUIRED	EXISTING LOT	PROPOSED LOT
AREA: 3/4 ACRE	AREA: 10,240 s.f.	AREA: 13,240 s.f.
FRONTAGE: 125'	FRONTAGE: 50'	FRONTAGE: N.C.
%COVERAGE: 15	%COVERAGE: 14.05%	%COVERAGE: 14.65%
SETBACKS / YARD REQUIREMENTS		
REQUIRED	EXISTING #139	EXISTING #140
FRONT YARD: 30'	FRONT YARD: 2.5'	FRONT YARD: 21.8'
SIDE YARD: 15'	SIDE YARD: 11.1'/14.9'	SIDE YARD: 7.9'/12.5'
REAR YARD: 15'	REAR YARD: 76.0'	REAR YARD: 25.5'
	PROPOSED #139	PROPOSED #140
	FRONT YARD: 15.1'	FRONT YARD: N.C.
	SIDE YARD: 12.2'/15.0'	SIDE YARD: N.C.
	REAR YARD: 97.9'	REAR YARD: N.C.

A STUB FOR MUNICIPAL SEWER EXISTS FOR #139. #140 HAS AN Eone PUMP AND IS CONNECTED TO MUNICIPAL SEWER.

EXISTING LOT COVERAGE COMPUTATIONS

EX. HOUSE #139	383 S.F.
EX. HOUSE #140	783 S.F.
EX. RET. WALL	173 S..F.
EX. CONC. PAD	100 S.F.
TOTAL:	1439 S.F.

$\frac{1439\ (100)}{10,240} = 14.05\%$

PROPOSED LOT COVERAGE COMPUTATIONS

PROP. HOUSE #139	885 S.F.
EX. HOUSE #140	783 S.F.
EX. RET. WALL	173 S..F.
EX. CONC. PAD	100 S.F.
TOTAL:	1941 S.F.

$\frac{1941\ (100)}{13,240} = 14.66\%$

APPLICANTS MUST BE AWARE OF THEIR OBLIGATION TO COMPLY WITH THE WETLANDS PROTECTION ACT AND THE TOWN OF STURBRIDGE WETLAND BYLAW FOR ANY DISTURBANCE OR CONSTRUCTION WITHIN THE DESIGNATED BUFFER ZONES OF A PROTECTED RESOURCE AREA.

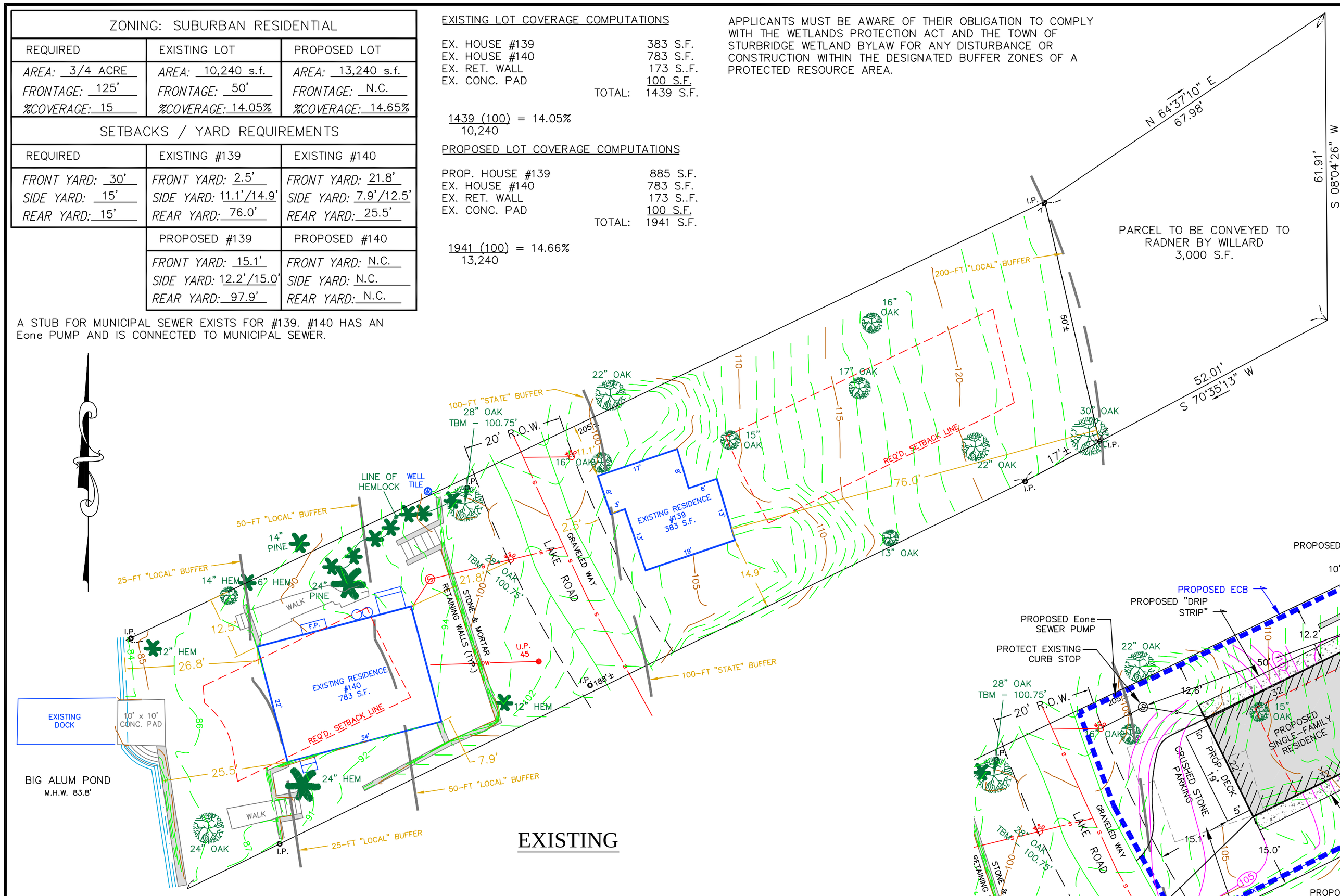

EXISTING

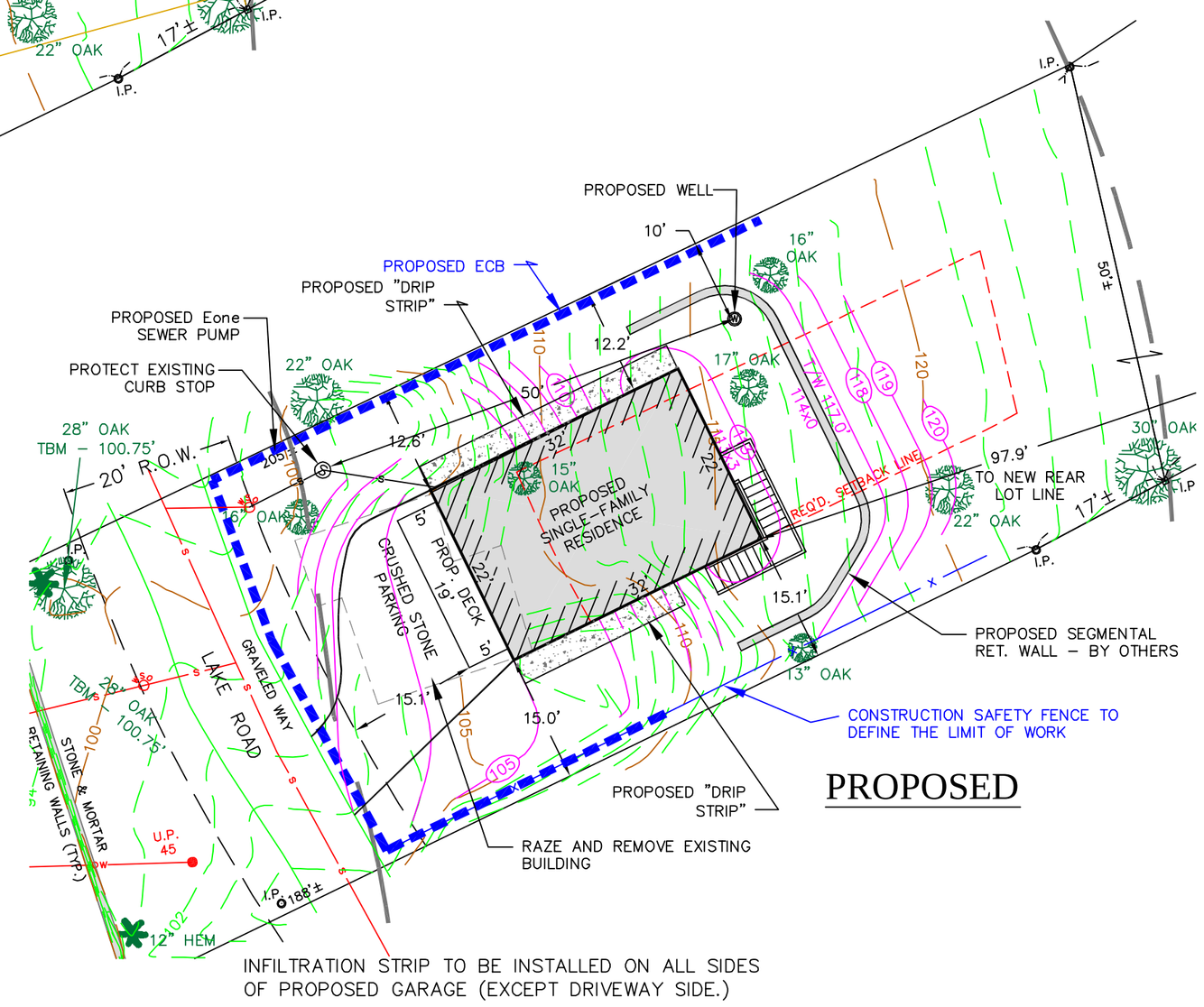

PROPOSED

COMMONWEALTH OF MASSACHUSETTS
LEONARD STANLEY JALBERT
No. 23300
CIVIL
REGISTERED PROFESSIONAL ENGINEER

Leonard S. Jalbert

ORIGINAL		REVISIONS					
DATE: 10/04/16	BY	REV.	DATE	DESCRIPTION	MADE	CHK'D	APV'D
DRAFTED BY:	SMB	1.	11/14/17	PER CONCOM MEMORANDUM 11/06/17	SMB	LSJ	
CHECKED	LSJ						
SUPERVISOR	LSJ						
REVIEWED	MLJ						
REVIEWED							
REVIEWED							

JALBERT ENGINEERING, INC.
CIVIL ENGINEERS & SURVEYORS
54 Main Street
Sturbridge, Massachusetts 01566-1244
Telephone: (508) 347-5136 • Toll Free: 1-800-339-5136
Fax: (508) 347-7962

SITE PLAN FOR
JOHN RADNER
139 & 140 LAKE ROAD
STURBRIDGE, MASSACHUSETTS
OCTOBER 4, 2016 SCALE: 1" = 15'

15 0 15 30 60
(IN FEET)

PLAN DATE: 11/14/17
DWG NUMBER
16204
REVISION 1

You created this PDF from an application that is not licensed to print to novaPDF printer (http://www.novapdf.com)

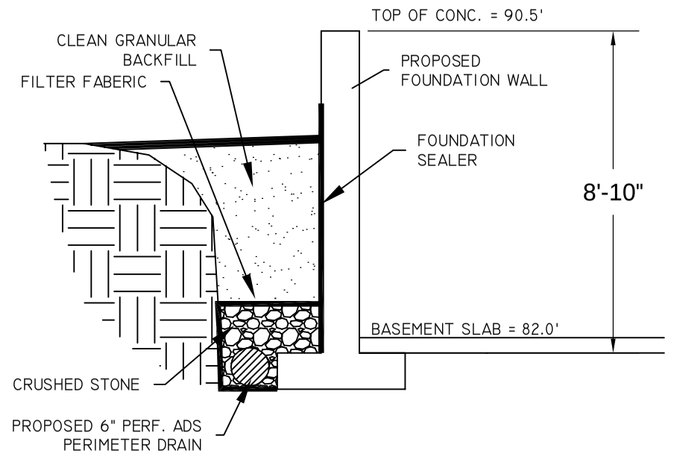

PROPOSED PERIMETER DRAIN

NOT TO SCALE

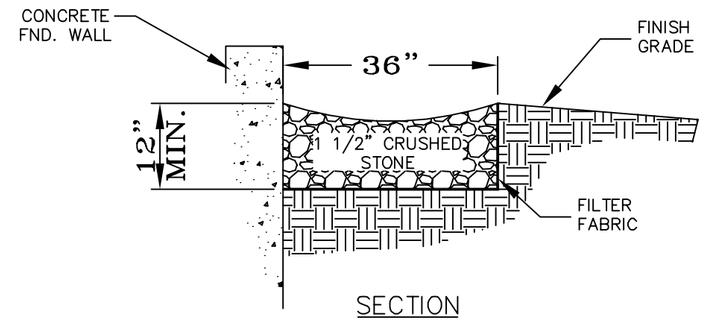

SECTION

STONE DRIP STRIP

SCALE: N.T.S.

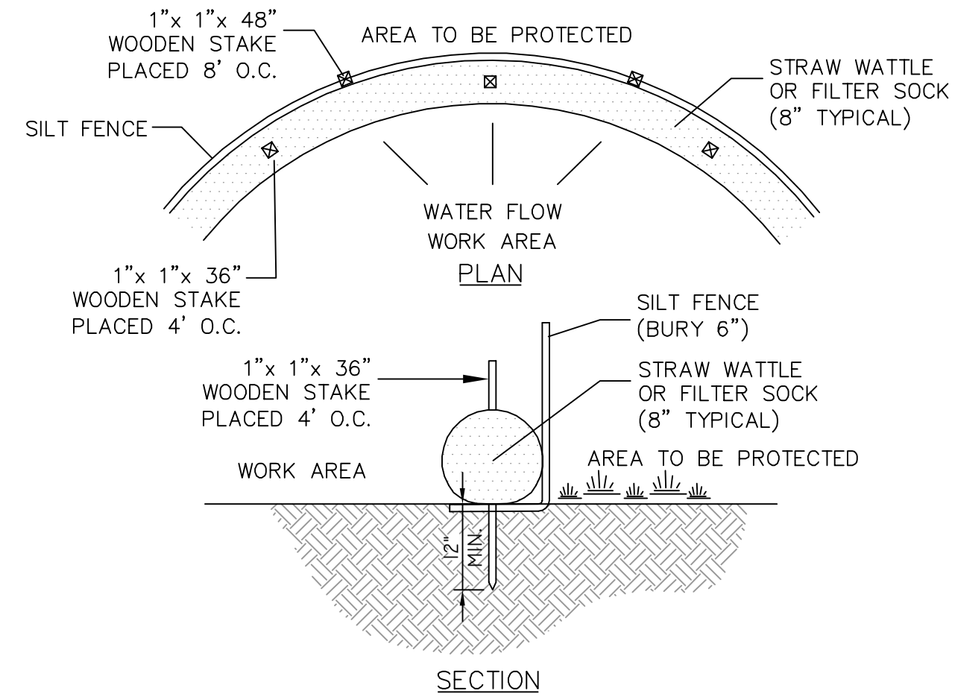

SECTION

EROSION CONTROL BARRIER (ECB)

SCALE: N.T.S.

NOTES:

THE EROSION CONTROL BARRIER IS TO BE INSTALLED BEFORE THE COMMENCEMENT OF ANY CONSTRUCTION AND REFLECTS THE LIMIT OF WORK FOR THIS PROJECT. THE BARRIER WILL BE MAINTAINED AND WILL REMAIN IN PLACE UNTIL THE SITE HAS BEEN STABILIZED.

THE SITE WILL BE SERVICED BY TOWN SEWER AND THE EXISTING WELL.

EXISTING E-ONE SEWER PUMP CONTROL PANEL TO BE REMOVED BY LICENSED ELECTRICIAN AND SAVED FOR REUSE.

FOUNDATION DRAIN TO BE CONSTRUCTED OF 6" PERF. SDR 35 PVC.

ALL EXCESS EXCAVATED MATERIAL (IF ANY) SHALL BE DIRECTLY LOADED INTO TRUCKS AND REMOVED FROM THE SITE. NO STOCKPILING IS TO OCCUR ON-SITE.

ALL CONSTRUCTION DEBRIS TO BE PROPERLY DISPOSED OF ON A DAILY BASIS. NO CONSTRUCTION DEBRIS TO BE PILED, BURIED OR DISCARDED ON-SITE.

THE CONTRACTOR SHALL CONTACT THE TOWN OF STURBRIDGE CONSERVATION COMMISSION AND THE OWNER'S REPRESENTATIVE SHOULD THERE BE ANY CONFLICT WITH THE PROPOSED IMPROVEMENTS.

THE CONTRACTOR SHALL BE RESPONSIBLE FOR TAKEN ALL NECESSARY PRECAUTIONS TO TO PROTECT THE EXISTING Eone PUMP ITS PLUMBING AND NECESSARY PLUMBING ALTERATIONS.

CONSTRUCTION SEQUENCING

1. FLAG THE LIMITS OF CONSTRUCTION AND HOLD PRE-CONSTRUCTION MEETING. LIMITS OF CONSTRUCTION SHALL BE THE EROSION CONTROL BARRIERS AS SHOWN ON THE PROPOSED SITE PLAN.

2. INSTALL EROSION AND SEDIMENT CONTROLS IN ACCORDANCE WITH THE PROPOSED SITE PLAN AND STAKEOUT PRINCIPAL CONSTRUCTION FEATURES. NO CONSTRUCTION SHALL OCCUR UNTIL THE EROSION CONTROL BARRIER IS INSTALLED AND APPROVED.

3. REMOVE AND DISPOSE OF EXISTING BUILDING. ALL DEMOLITION MATERIAL TO BE LOADED DIRECTLY INTO TRUCKS AND REMOVED FROM SITE. TEMPORARILY STABILIZE DISTURBED AREAS WITH MULCH AND SEED.

4. EXCAVATE AREA FOR PROPOSED FOUNDATION RELOCATION (FOUNDATION EXCAVATION TO SERVE AS TEMP RUNOFF BASIN). ALL EXCAVATION TO BE LOADED DIRECTLY INTO THE TRUCKS AND TO BE REMOVED FROM THE SITE.

5. WHILE THE FOOTINGS AND FOUNDATIONS CURE (PRIOR TO BACKFILLING) SITE EXCAVATION (IF ANY) IS TO BE PERFORMED. ALL UNSUITABLE EXCAVATION TO BE LOADED DIRECTLY INTO THE TRUCKS AND TO BE REMOVED FROM THE SITE.

6. AFTER FOUNDATION CURES, BACKFILL FOUNDATION AND INSTALL FOUNDATION DRAIN.

7. BEGIN TO FRAME AND COMPLETE HOUSE.

8. APPLY PERMANENT STABILIZATION MEASURES IN ACCORDANCE WITH THE PROPOSED SITE PLAN (ALL DISTURBED AREAS ARE TO BE MULCHED)

COMMONWEALTH OF MASSACHUSETTS
LEONARD STANLEY JALBERT
No. 23300
CIVIL
REGISTERED PROFESSIONAL ENGINEER

Leonard S. Jalbert

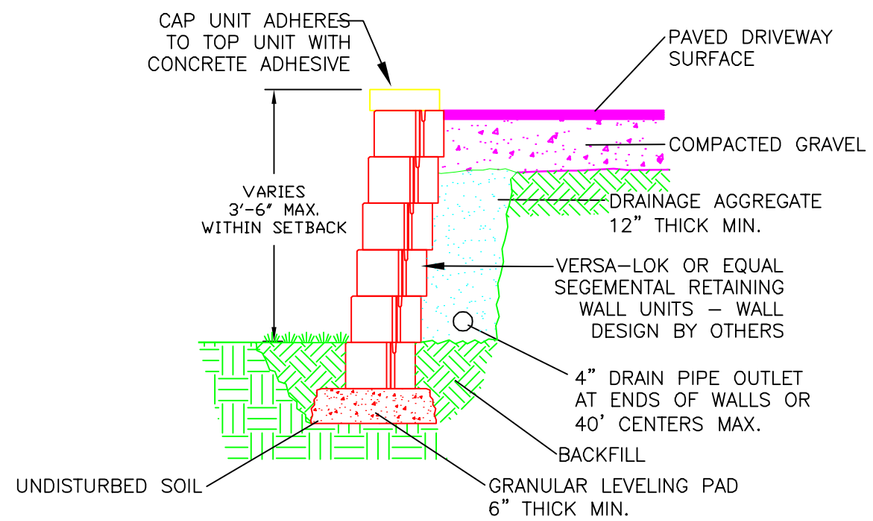

TYPICAL SEGEMENTAL RETAINING WALL DETAIL

NOT TO SCALE

ORIGINAL		REVISIONS					
DATE: 10/04/16	BY	REV.	DATE	DESCRIPTION	MADE	CHK'D	APV'D
DRAFTED BY:	SMB	1.	08/08/17	ADDED PROPOSAL FOR #139	SMB	LSJ	
CHECKED	LSJ	2.	11/14/17	PER CONCOM MEMORANDUM 11/6/17	SMB	LSJ	
SUPERVISOR	LSJ						
REVIEWED	MLJ						
REVIEWED							
REVIEWED							

JALBERT ENGINEERING, INC.
CIVIL ENGINEERS & SURVEYORS
54 Main Street
Sturbridge, Massachusetts 01566-1244
Telephone: (508) 347-5136 • Toll Free: 1-800-339-5136
Fax: (508) 347-7962

SITE PLAN FOR
JOHN RADNER
139 & 140 LAKE ROAD
STURBRIDGE, MASSACHUSETTS
OCTOBER 4, 2016 SCALE: AS NOTED

PLAN DATE: 11/14/17

DWG NUMBER

16204

SHEET 2 OF 2

REVISION 2

You created this PDF from an application that is not licensed to print to novaPDF printer (http://www.novapdf.com)